Chicago Pneumatic

CP9780

Model D
Air Sander

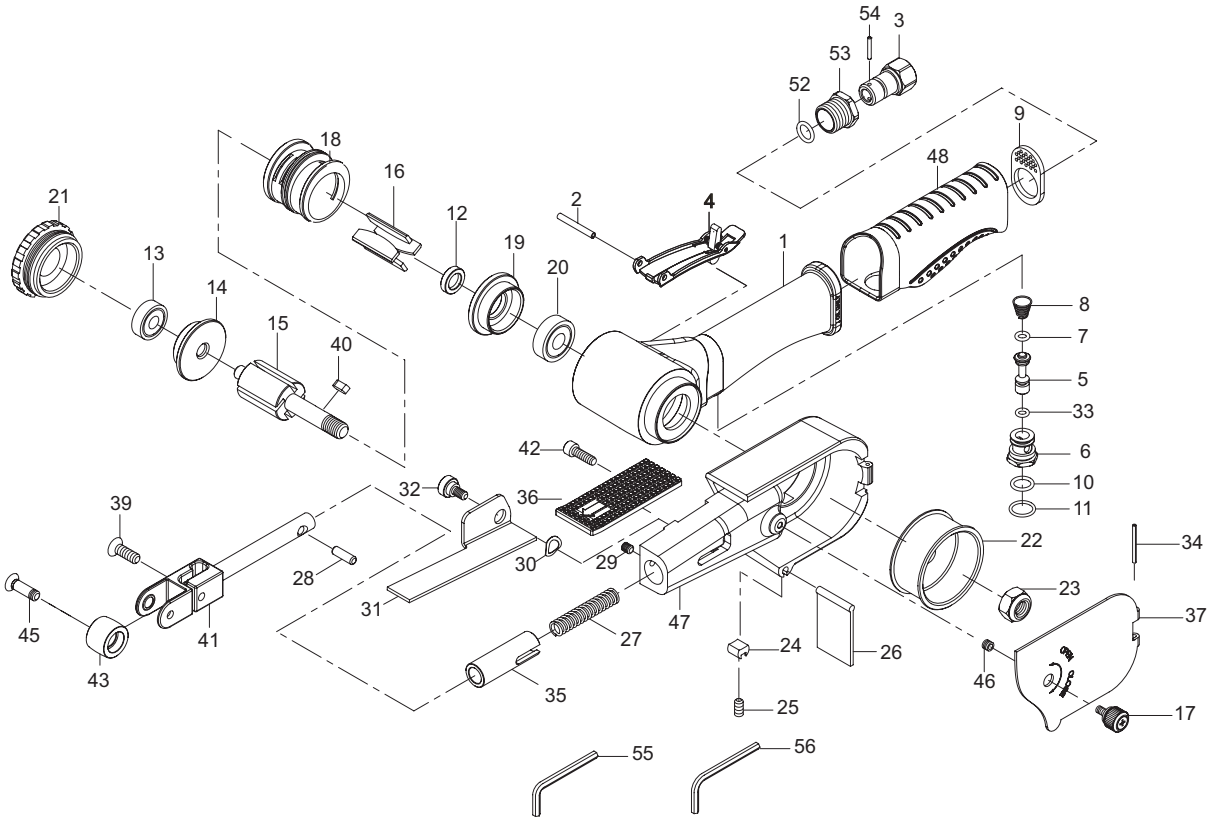

Index No	Part No	Description	Qty
1	2050500603	Housing	1
2	2050496183	Spring Pin	1
3	2050499813	Air Inlet	1
4	2050499823	Safety Lever Assy.	1
5	2050499833	Valve Stem	1
6	2050499843	Adjust Valve	1
7	2050485133	O-Ring	1
8	2050499853	Spring	1
9	2050500423	Exhaust Deflector	1
10	2050485153	O-Ring	1
11	2050485863	O-Ring	1
12	2050499873	Spacer	1
13	2050486823	Ball bearing	1
14	2050499883	Rear end plate	1
15	2050563023	Rotor	1
16	2050563033	Blades (set of 4)	1
17	2050499913	Screw	1
18	2050499923	Cylinder	1
19	2050499933	Front end plate	1
20	2050486843	Bal bearing	1
21	2050499953	Cap	1
22	2050499963	Drive pulley	1
23	2050499973	Nut	1
24	2050499983	Guard body luck	1
25	2050499993	Screw	1
26	2050500003	Dust cover	1
27	2050500013	Spring	1
28	2050500023	Pin	1
29	2050500033	Screw	1
30	2050500043	Washer	1

Index No	Part No	Description	Qty
31	2050500053	Flat shoe	1
32	2050500063	Screw	1
33	2050500073	O-ring	1
34	2050500083	Spring pin	1
35	2050500093	Bushing	1
36	2050500103	Finger pad	1
37	2050500113	Guard	1
39	2050500133	Screw	1
40	2050500143	Key	1
41	2050500153	Tension bar	1
42	2050500163	Screw	1
43	2050500173	Pulley	1
45	2050500193	Screw	1
46	2050500203	Screw thread insert	1
47	2050500213	Guard body	1
48	2050500223	Grip	1
52	2050485623	O-ring	1
53	2050500243	Screw	1
54	2050500253	Pin	1
55	2050500263	Hex. Key Wrench (4mm)	1
56	2050500273	Hex. Key Wrench (2.5mm)	1
	2050468093	Warning label	1
	2050468093	Warning label	1
	Tune-up kit		1
	2050503863 (Incl. Part No: 7.8.10.11.12.13.16.20.33.40.52)		

	8940168906	OPERATOR'S MANUAL
	8940168305	EC DECLARATION
	6159948770	SAFETY INSTRUCTIONS